PCB LAYOUT

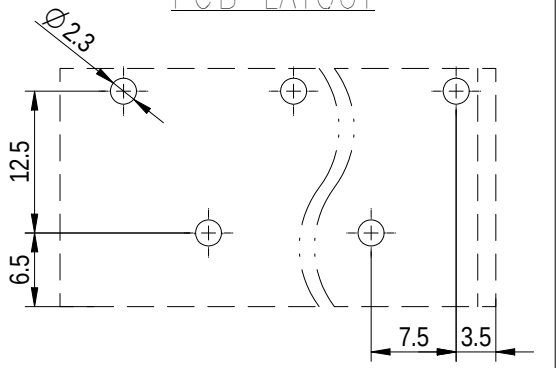

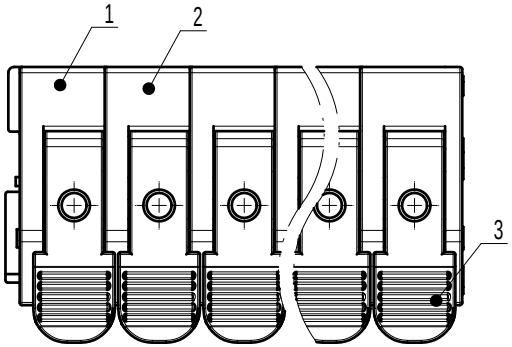

未注公差/General tolerances(mm)														
0~3	>3~6	>6~10	>10~18	>18~30	>30~50	>50~80	>80~120	>120~180	>180~250	>250~315	>315~400	>400~500	>500	⌓ 0.1/10
±0.12	±0.18	±0.22	±0.26	±0.31	±0.37	±0.57	±0.80	±0.93	±1.05	±1.15	±1.60	±2.20	±2.50	∠ ±2°

UL 标准/UL Standard:	B	C	D
额定电压/电流/Rated Voltage(V)/Current(A)	600V/41	600V/41	/
IEC 标准/IEC Standard:			
过压类别/Overvoltage Category/污染等级/Pollution Degree	III/3	III/2	II/2
额定电压/电流/Rated Voltage(V)/Current(A)	800/41	1000/41	1000/41
额定脉冲电压(KV)/Rate Impulse Voltage(KV)	8	8	8
线径范围(硬线和软线)/Wire Range(rigid and flexible)(AWG/mm²)	24~8 / 0.2~6,10(sol)		
间距/Pitch(mm)/线数范围/Poles	7.5/N=02~12P		
剥线长度/Stripping length(mm)	11~13		
使用温度范围/Operating temperature(℃)	-40~+105		
符合RoHS环保要求/Conform to RoHS	Yes		

If the dimensions are not marked, please refer to the 3D file

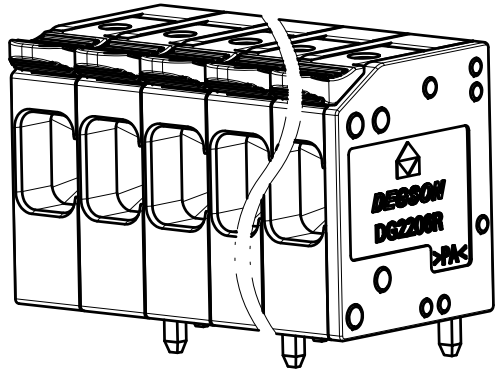

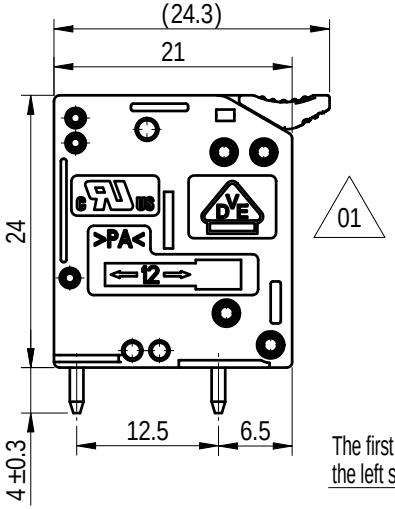

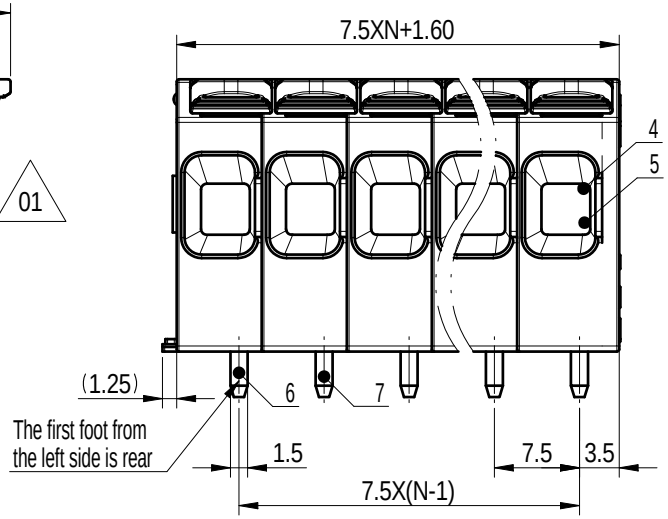

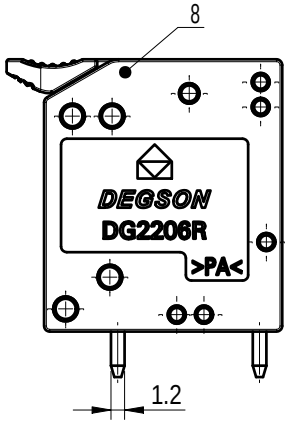

ITEM	NAME OF PART	MATERIAL	NOTES
8	Cover	PA66	UL94V-0
7	Front Pin header	Copper	Sn Plated
6	Back Pin header	Copper	Sn Plated
5	Spring	Stainless steel	/
4	Block	Stainless steel	/
3	Lever	PA66-GF	UL94V-0
2	Front Housing	PA66	UL94V-0
1	Back Housing	PA66	UL94V-0

DEGSON	MATERIAL:	SURFACE/COLOR:	
	MAT NO./REV: /	MAT STATUS: 批量	
APPD: 朱伟明 2022.12.27	NAME DG2206R-7.5-DB-XXP-1Y-00Z(H)		
CHKD: 张玉华 2022.12.23			
DRFT: 阮帅帅 2022.12.22	DRAWING NO. 200100844	TYPE CUSTOMER DRAWING	DRAWING STATUS 已发布
A4 mm (inch)	SCALE 1.5:1	SHEET 1/1	

REV	ECN	DESCRIPTION	DRFT	DATE
01		1x由00升为01增加VDE刻字	阮帅帅	2022.12.22

Transfer or duplication of this document as well as the utilization or communication of its contents are prohibited unless explicit authorization is granted. Violations will be liable for compensation. All rights reserved for patent, utility model or designs registrations. 除非经书面授权，否则禁止转让、复制、利用、交流本文件的内容。侵犯者将负赔偿责任。本公司保留对涉及发明、实用新型和外观专利的所有权利。