尺寸公差(mm)					
0 ~ 30	>30 ~ 60	>60 ~ 100	>100 ~ 150	>150	0.05/10
±0.20	±0.30	±0.50	±0.70	±1.00	±1°

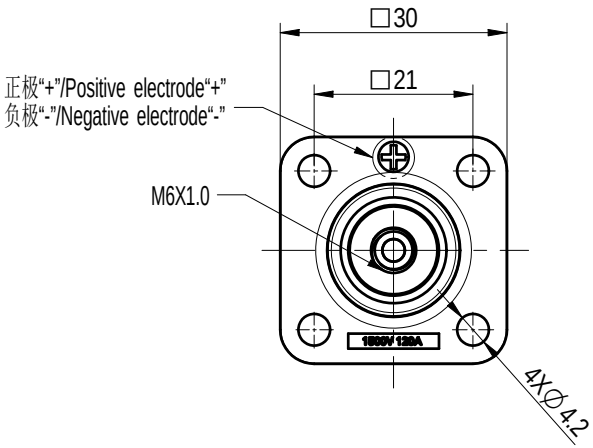

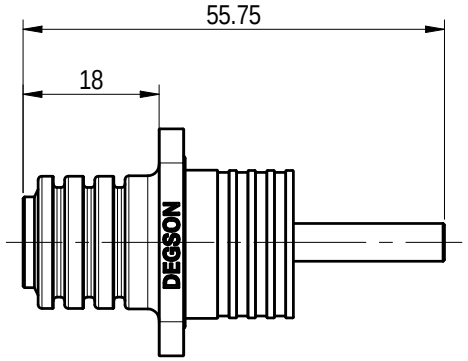

技术要求/Technical requirements:	
颜色/Color	Black,Orange
锁紧方式/Locking method	螺钉(Copper Screw)
接线方式/Terminal	Copper Screw
外壳材料/Housing materrial	PA+GF
接触件材料/Connector materrial	铜合金(Copper alloy)
安装螺母紧固扭矩/Screw torque	M4/0.4~0.7N.m M5/2N.m M6/3N.m
(01) 推荐线鼻子型号(M6)/Recommended Line nose(M6)	SC25-6(M6)
(01) 推荐螺丝型号(M6)/Recommended screw type(M6)	GB 9074.4-88 M6X10
额定电压/Rated voltage	1500V DC
额定电流/Rated current	120A
绝缘电阻/Insulate resistance	≥5000MΩ(drying)
耐电压/Withstanding voltage	6800V/min
过电压等级/Overvoltage category	III
污染等级/Pollution degree	3
防护等级/Ingress protection	IP67(Mated)
使用温度范围/Operating temperature(°C)	-40~+125(including temperature rise)
盐雾/Salt spray	48H
储存温度/Storage temperature(°C)	-40~+85
阻燃等级/Flame retardant ability	UL94-V0
符合RoHS环保要求/Conform to RoHS	Yes
满足户外使用/Satisfy outdoor use	Yes

EGD-120A-25-B/S-XX-10

Color :BK : Black 负极
OR : Orange 正极

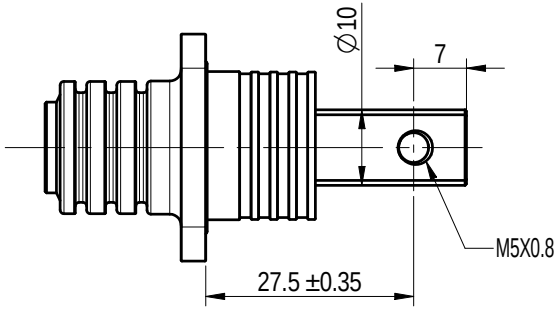

正极/Positive electrode

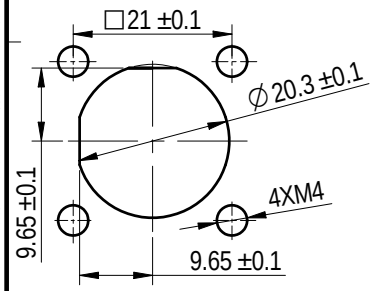

Recommended Panel cut-out

负极/Negative electrode

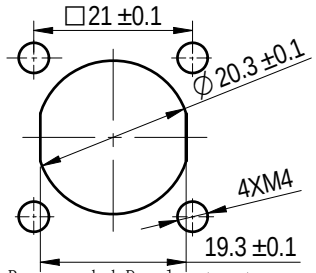

Recommended Panel cut-out

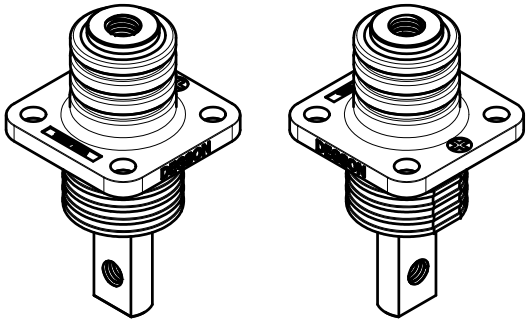

建议线鼻子SC25-6:

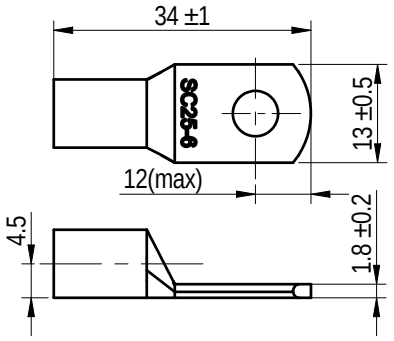

建议：GB9074.4-88
M6X1.0（压接处)适配螺丝尺寸

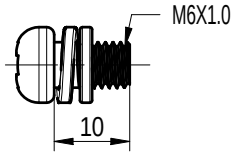

REV	ECN	DESCRIPTION	DRFT	DATE
01		增加推荐螺丝和线鼻子	Wang zp	2024-10-30

DEGSON

APPD:	liu J	2024-10-30
CHKD:	Yu JH	2024-10-30
DRFT:	Wang zp	2024-10-30

A4 mm (inch)

MATERIAL: 材质 | SURFACE/COLOR: 表面处理
MAT NO./REV: 物料编码 / 版本 | MAT STATUS: 物料状态

NAME: EGD-120A-25-B/S-XX-10

DRAWING NO.	TYPE	DRAWING STATUS	SCALE	SHEET
200291791	图纸类型	图纸状态	1:1	1/1

Transfer or duplication of this document as well as the utilization or communication of its contents are prohibited unless explicit authorization is granted. Violations will be liable for compensation. All rights reserved for patent, utility model or designs registrations. 除非经予明确授权，否则禁止转让、复制、利用、交流本文件的内容。侵犯者将负赔偿责任。本公司保留对涉及发明、实用新型和外观专利的所有权利。